A69.53.V2
IN WALL SOAP DISPENSER

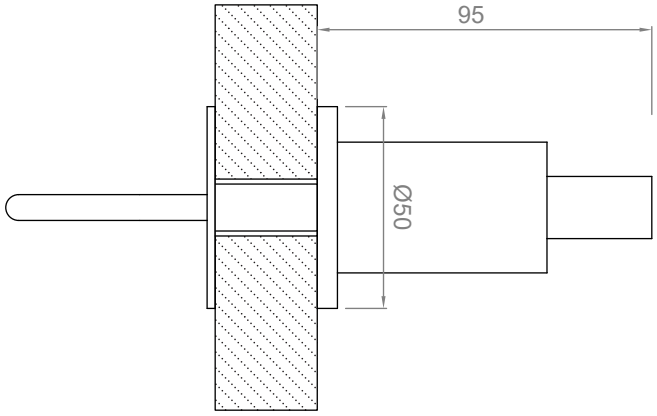

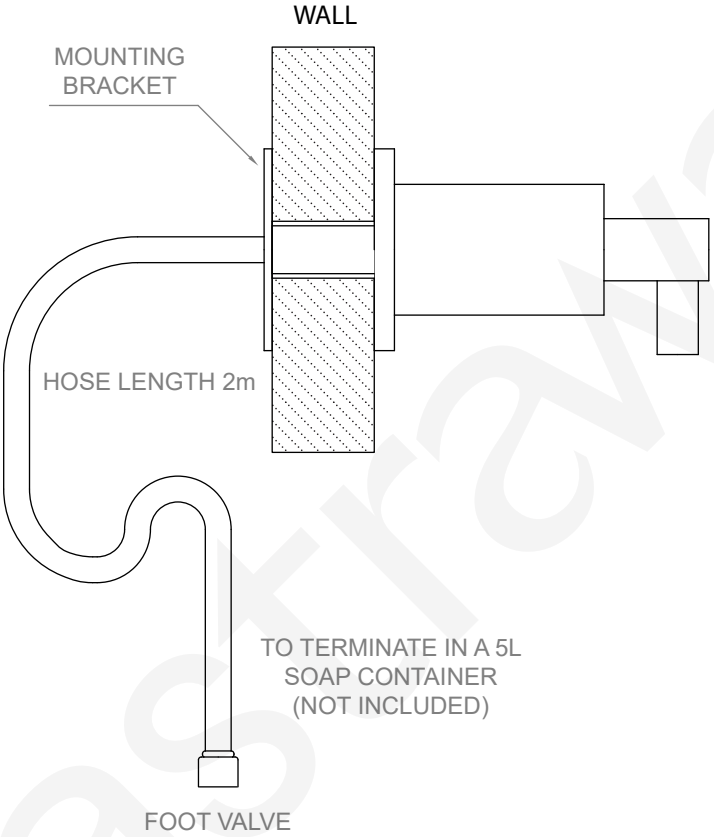

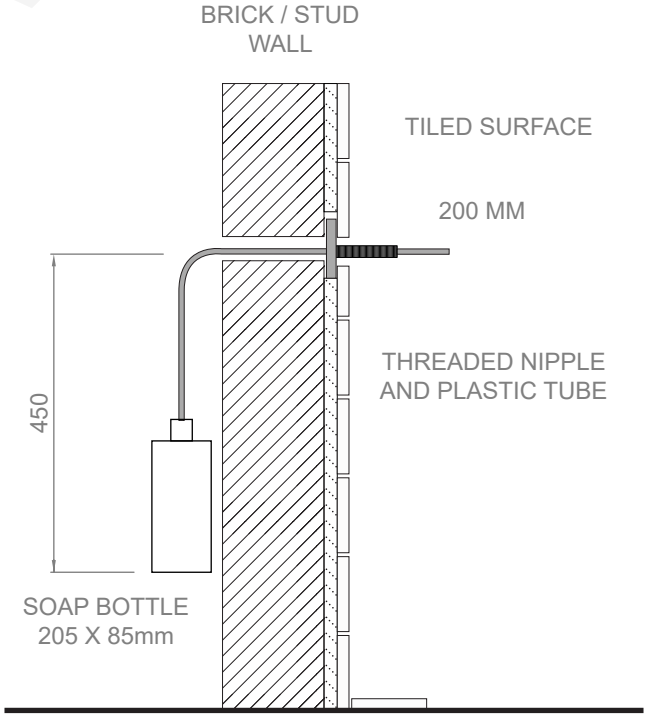

astrawalker ™