A82.05

WALL SET

[AVAILABLE WITH FLOW CONTROL, ADD .FC TO END OF CODE - 6 STAR/3.5Lpm WELS RATING]

STANDARD WITH METAL INSERT
OTHER HANDLE OPTIONS

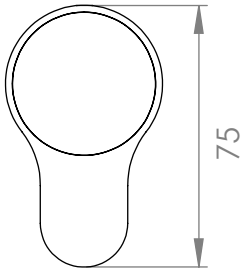

METAL INSERT

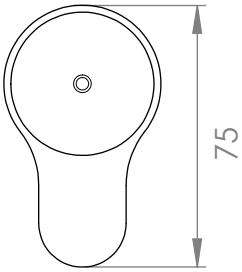

.V2 WITHOUT INSERT

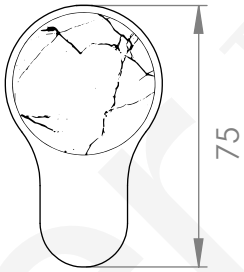
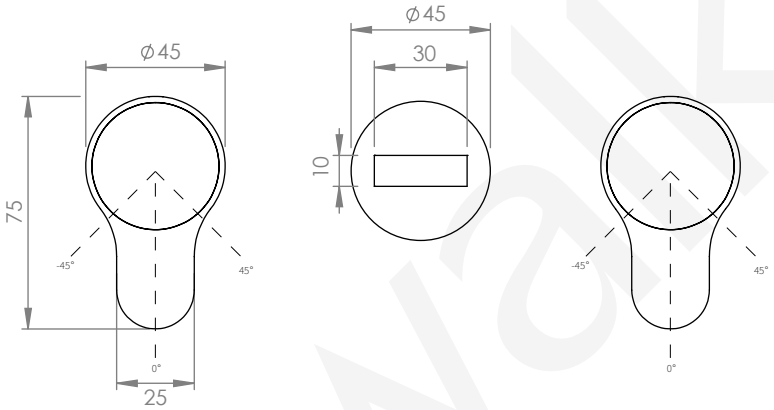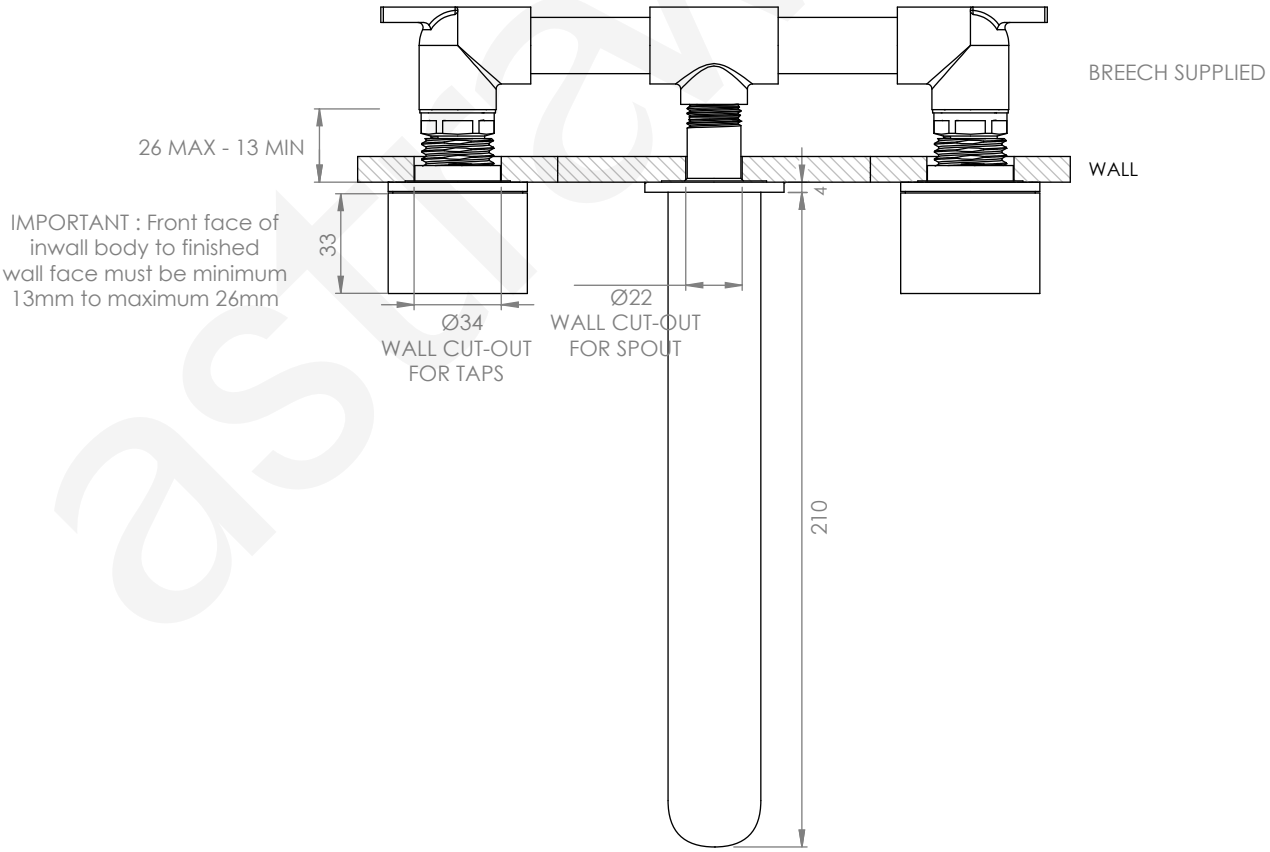
.V3 WHITE CARRARA MARBLE