OUTDOOR SHOWER

Installation Instructions

PARISI

1 Set the position of the in-floor body based on the shower area (The distance between them is 750mm), recess the body into the floor. Note the Min/Max on the body and allow for your finished floor level.

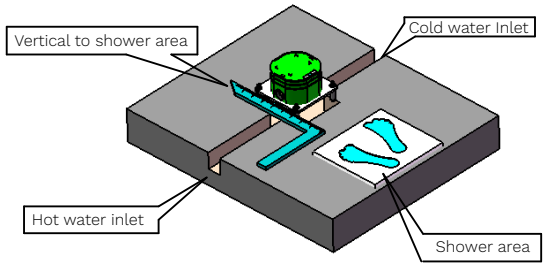

2 Connect hot and cold water pipes to the in-floor body, and perform a pressure/leak test.

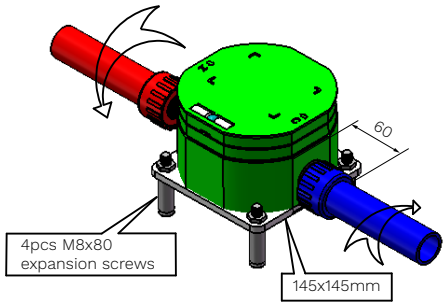

3

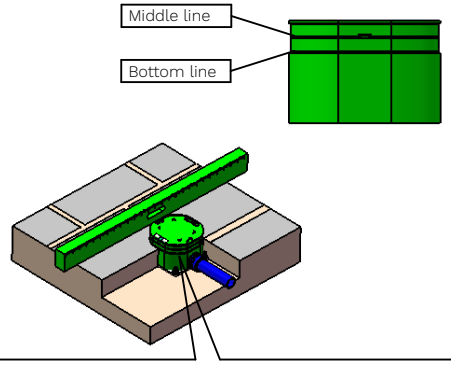

Align the body so that it is level and centred. Fix the body to the floor using the 4pcs M8 expansion screws. The finished floor level must be higher than bottom line and lower than middle line of body.

4 Remove the protective cover and unscrew the pressure test plugs using an 8mm Allen Key. Cut the plastic sleeve flush with the finished floor.

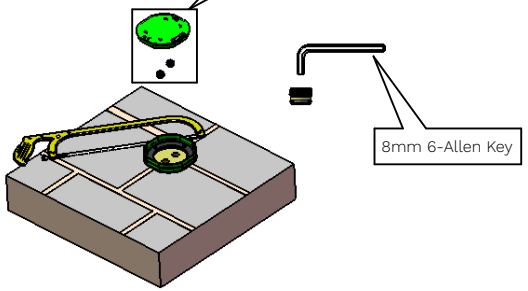

5 Fix the bottom half of the mast to the body, make sure you Insert water pipes into the corresponding Hot/Cold inlet. Secure the fixing plate to body with 4 screws provided, then lower the decorative cover to conceal the fixing plate.

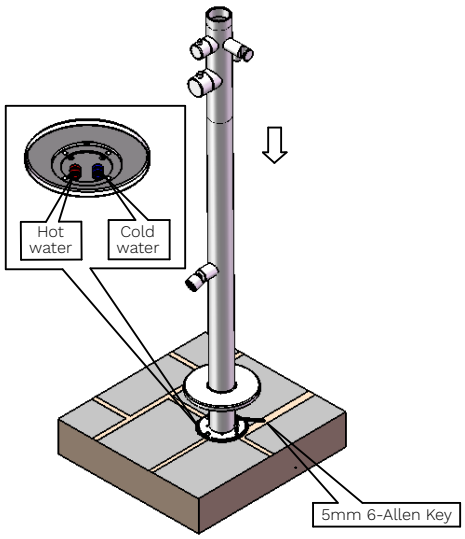
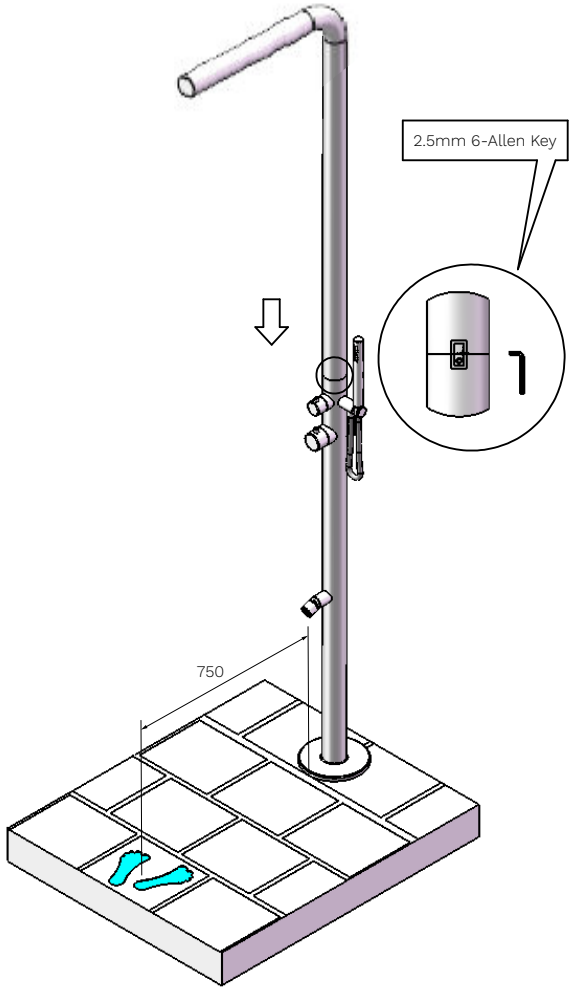
6 Install the upper mast to the lower mast, align the rectangular indicator lines on the back of the mast and lock the mast together using the screw and Allen Key.
(Connect the hand shower and flexible hose if it is applicable to your model)