AXOR

AXOR Montreux
3-hole basin mixer 180 with cross handles and pop-up waste set
Surfaces: **Brushed Nickel** Article Number: **16513820**

Description

product features

- consists of: 3-hole basin mixer, waste set
- ComfortZone 180
- projection 175 mm
- swivel range 120°
- normal spray
- flow rate at 3 bar: 5 l/min
- suitable for continuous flow water heaters
- pop-up waste set

Technology

Product image
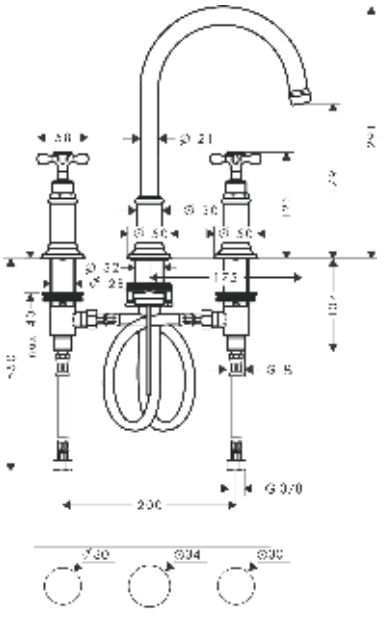
Scale drawing