Leben im Bad
Living bathrooms

MOUNTING INSTRUCTIONS

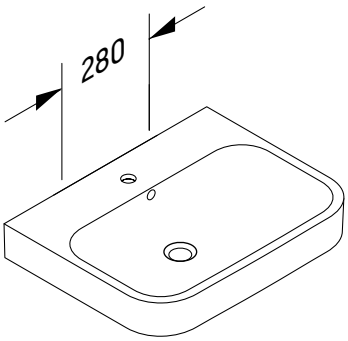

231810 . .
231812 . .
231860. .
231865 . .
231880 . .

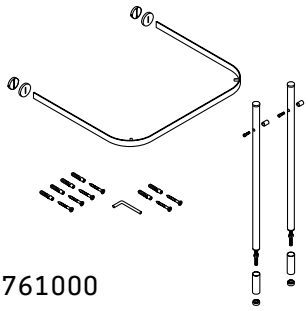

0030761000
0030771000, # 0030781000
0030791000, # 0030281000

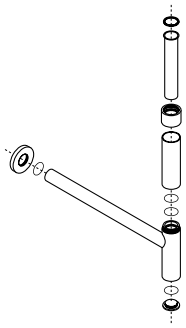

00503610 . .

M

1

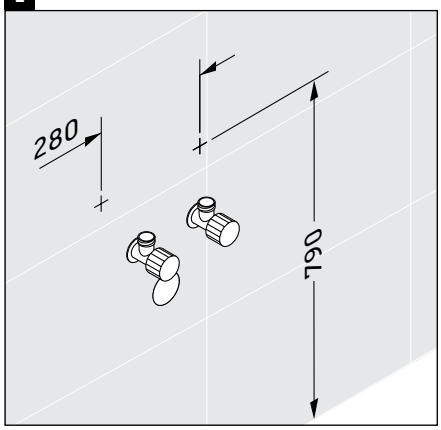

2

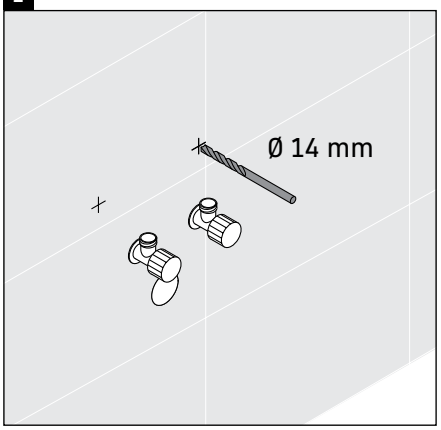

3

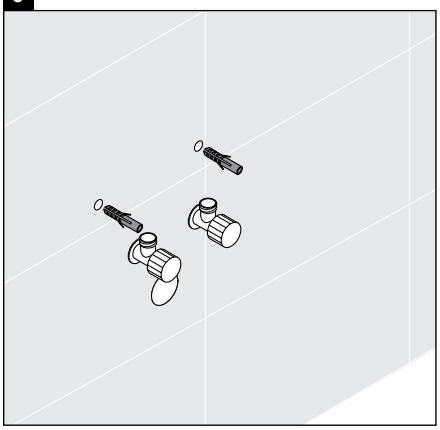

4

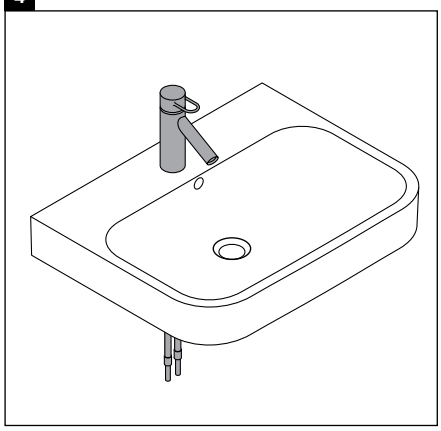

5

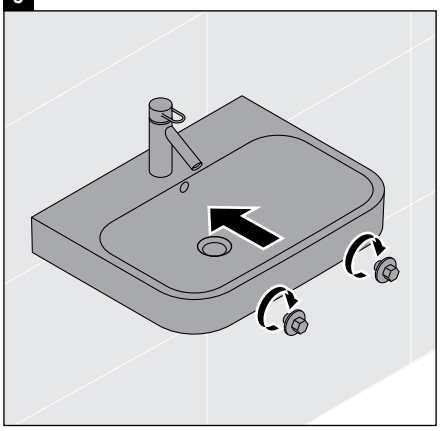

6

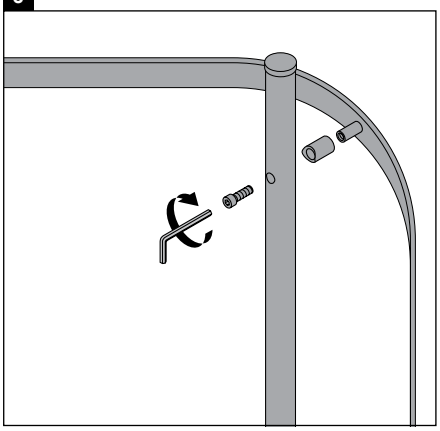

7

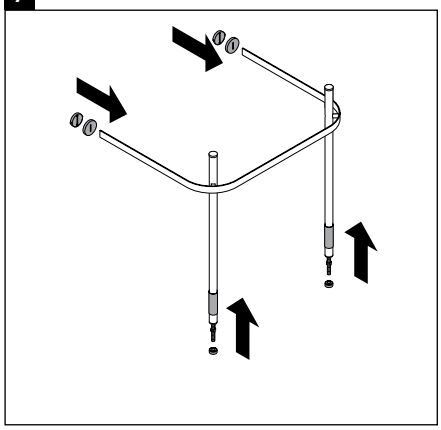

8

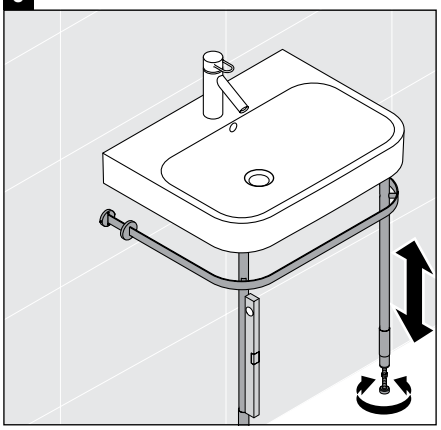

9

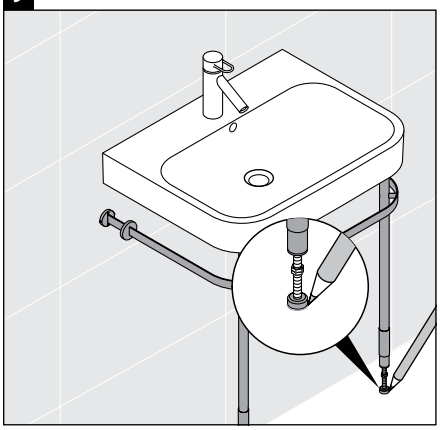

10

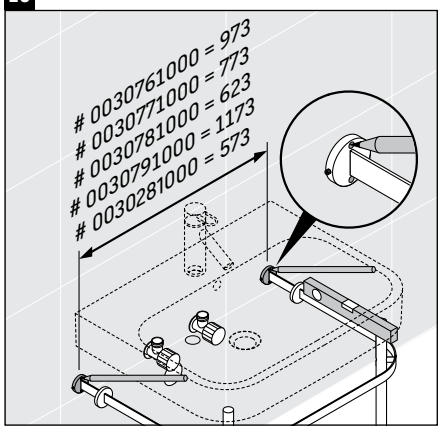

11

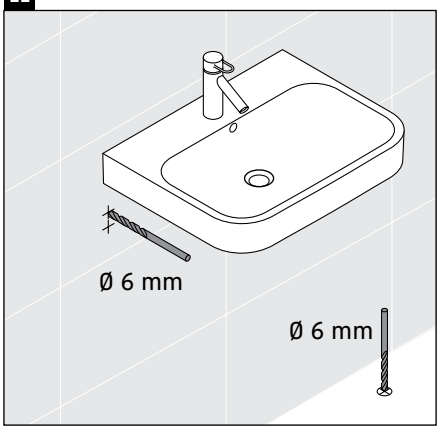

12

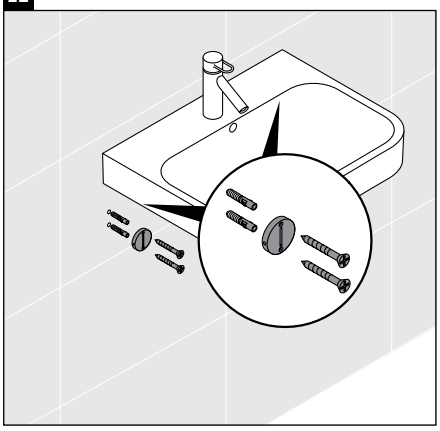

Duravit AG
P.O. Box 240
Werderstr. 36
78132 Hornberg
Germany
Phone +49 78 33 70 0
Fax +49 78 33 70 289
info@duravit.com
www.duravit.com

13

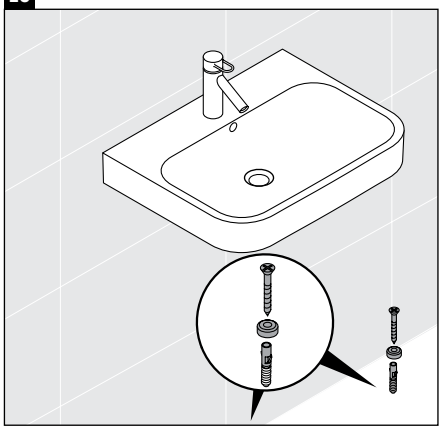

14

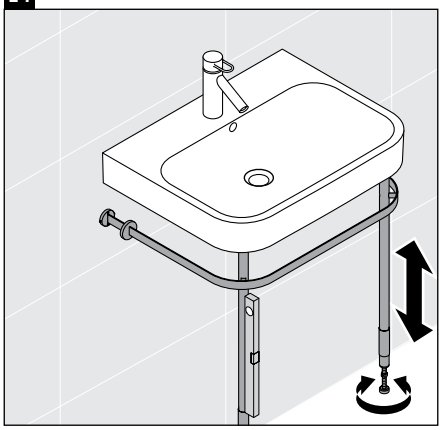

15

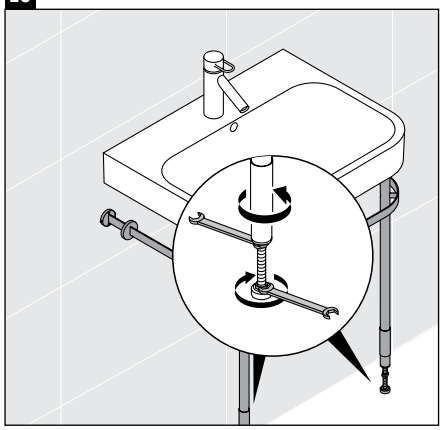

16

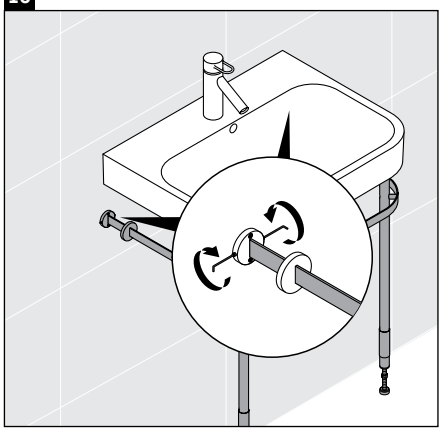

17

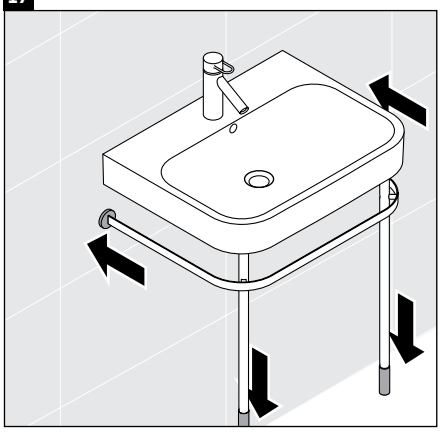

18

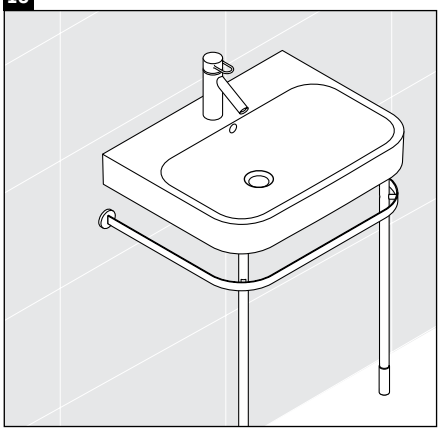

19

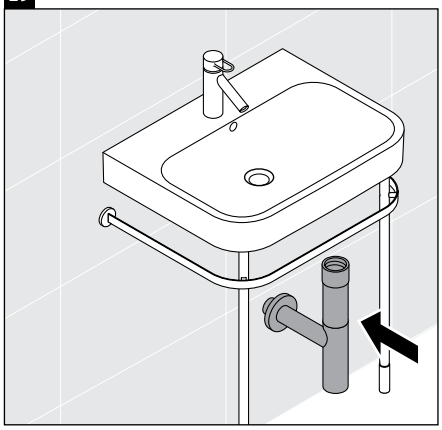

20

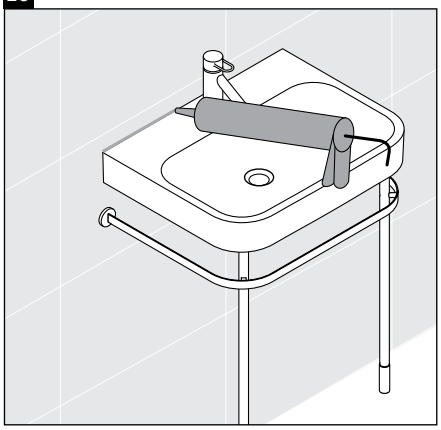

DURAVIT

Best.-Nr. 56797/16.02.3 We reserve the right to make technical improvements and enhance the appearance of the products shown.